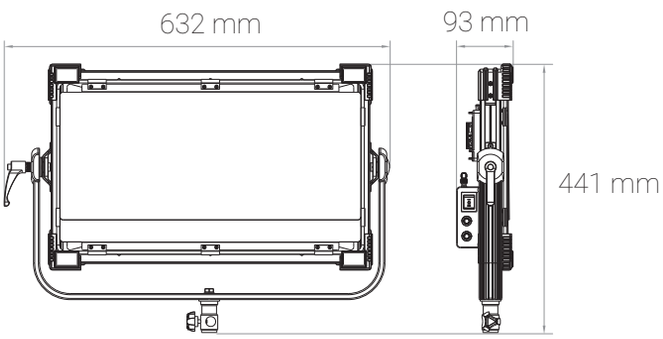

DIMENSIONS

Item No.	16030402
EAN Code	4250972501678
Net Weight	4.6 kg (10 lbs)

Note Protection Mark according to DIN 34

SPECIFICATION

LED SOURCE	
Power Consumption	191 W
TLCI	94-98
Color Rendering Index CRI	93-97
Beam Angle	120°
Color Temperature	3200-5600K variable
Power Variation	0-100% variable
POWER OPTIONS	
Input voltage	24-36V
AC Power Supply	DC 28V 7.5A
V-mount Battery	24-36V
DC power plug	XLR-4
GENERAL	
DMX	XLR 3-pin IN and OUT
Thermal Design	Silent Passive Cooling
Protection Class	IP 20
Certifications	CE, FCC, RoHS, REACH

All specifications are nominal / typical values.

PHOTOMETRIC DATA (preliminary results)

SF 200 (3200K).CSV: CCT = P3298 (-0.6)

TLCI - 2012 : **97** (P3298)

Sector	Lightness	Chroma	Hue
R	0	0	0
R/Y	0	0	0
Y	0	0	0
Y/G	0	0	0
G	0	0	0
G/C	0	-	0
C	0	0	0
C/B	0	0	0
B	0	0	0
B/M	0	0	-
M	0	0	0
M/R	0	0	-

SF 200 (5600K).CSV: CCT = D5670 (-0.9)

TLCI - 2012 : **98** (D5670)

Sector	Lightness	Chroma	Hue
R	0	0	0
R/Y	0	0	0
Y	0	0	-
Y/G	0	0	0
G	0	0	0
G/C	0	0	0
C	0	0	0
C/B	0	0	-
B	0	-	0
B/M	0	0	0
M	0	0	0
M/R	0	0	0

ColorChecker, Video (601/709) coded
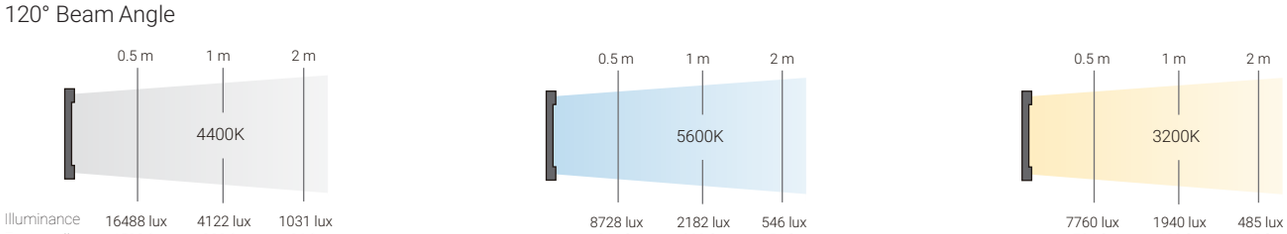
120° Beam Angle